APPLICATION

The electric actuators **MODACT MONED, MONEDJ, MOPED** are designed for shifting valves and/or other elements for which they are suitable with their reversible rotary motion. Other using than that for controlling valves should be discussed with the manufacturer. The actuators can operate in circuits of remote control. The actuators can also operate in circuits of automatic regulation with the regime S4 – 25 %; 1200 h^{-1}.

OPERATING CONDITIONS

The actuators **MODACT MONED, MONEDJ, MOPED** are resistant against influence of operating conditions and external effects of the classes AA7, AB7, AC1, AD5, AD7, AE5, AE6, AF2, AG2, AH2, AK2, AL2, AM2, AN2, AP3, BA4 and BC3 according to ČSN 33 2000-3.

When the actuator is installed on a free area it is recommended to fit it with a light shelter against direct impact of atmospheric effects. The shelter should overlap the actuator contour by at least 10 cm at the height of 20 – 30 cm.

When the actuators are to be installed in a working environment with temperature below -10°C and in an environment with relative humidity above 80 %, it is always necessary to use an anti-condensation heater fitted to all actuators.

The electric actuators can be installed in areas with non-flammable and non-conductive dust, provided that this does not adversely influence their function. Here, it is necessary to strictly observe ČSN 34 3205. It is recommended to remove dust as soon as its layer is about 1 mm thick.

Notes:

The area under a shelter means the one where falling of atmospheric precipitations under and angle up to 60° from the vertical is prevented.

The electric actuator must be installed in a place where cooling air has a free access. Minimum distance from a wall for access of air is 40 mm. Therefore, the area where the electric actuator is installed must be sufficiently large, clean and ventilated.

Classes of external effects

Basic characteristics – excerpt from ČSN 33 2000-3:

1) AA7 - Combined effect of surrounding temperature from -25 °C to +55 °C and relative humidity from 10 %.
2) AB7 - Surrounding temperature identical with point 1. The lowest relative humidity 10 %; the highest relative humidity 100 % with condensation.
3) AC1 - Altitude ≤ 2 000 m a.s.l.
4) AD7 - occurrence of water – shallow dipping – short-time
5) AE6 - occurrence of foreign solid particles – strong dustiness. Thick dust layers. Dust fall-out higher than 350 and not exceeding 1000 mg/m^2 per day.
6) AF2 - Occurrence of corrosive or polluting substances is atmospheric. Presence of corrosive polluting substances is significant.
7) AG2 - Medium mechanical stress. In common industrial processes.
8) AH2 - Medium vibrations. In common industrial processes.
9) AK2 - Serious danger of growth of plants or moulds.
10) AL2 - Serious danger of occurrence of animals (insects, birds, small animals).
11) AM2 - Harmful effects of released stray currents
12) AN2 - Medium solar radiation. Intensity > 500 and 700 W/m^2.
13) AP3 - Medium seismic effects. Acceleration > 300 Gal 600 Gal
14) BA4 - Personal qualification. Instructed staff.
15) BC3 - Frequent contact of persons with earth potential. Persons are in frequent contact with foreign conductive parts or stand on and conductive support.

WORKING REGIME

The actuators can be operated with the type of loading S2 according to ČSN EN 60 034-1. The run period at temperature +50 °C is 10 minutes; the mean value of loading torque should not exceed 60 % of the value of maximum tripping torque M_V. The actuators can also work in the regime S4 (interrupted run with start-up) according to

ČSN EN 60 034-1. Load factor N/(N+R) is max. 25 %; the longest working cycle N+R is 10 minutes (course of working cycle is shown in the figure). The highest number of closing operations in automatic regulation is 1200 cycles per hour. Mean value of loading torque with load factor 25 % and surrounding temperature +50 °C is not higher than 40 % of maximum tripping torque M_V.
The highest mean value of loading torque is equal to rated torque of the actuator.

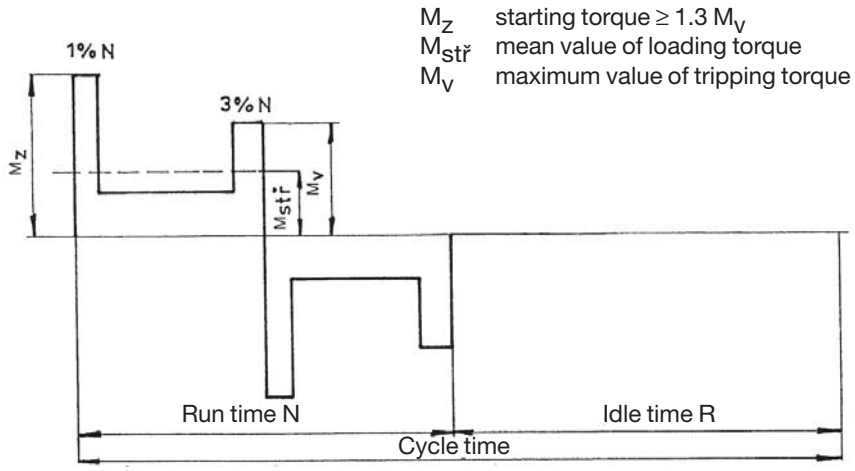

Course of working cycle

Service life of actuators

Service life of the electric actuators is at least 6 years.

The actuator designed for shut-off valves must be able to perform at least 10,000 working cycles (Close-Open-Close).

The actuator designed for regulation purposes must be able to perform at least 1 million cycles with running time (when the output shaft is moving) at least 250 hours. Service life in operating hours (h) depends on loading and number of switching actions. High frequency of switching is not always beneficial for precision of regulation. For reaching the longest possible faultless period and service life, it is recommended to set frequency of switching to the lowest possible number of switching actions necessary for the given process. Orientational data of service life derived from the set regulation parameters are shown in the following table.

Service life of electric actuators for 1 million starts

Service life [h]	830	1 000	2 000	4 000
Number of starts [1/h]	Max. number of starts 1200	1 000	500	250

TECHNICAL DATA

Basic technical parameters

They are given in Tables 1, 2, 3.

Supply voltage

Supply voltage of electric motor:	MODACT MONED, MOPED	3 x 220/380 V +10 %, -15 %, 50 Hz; +3% -5%; 3 x 230/400 V, +10 %, -15 %, 50 Hz ±2%
	MODACT MONEDJ	1 x 220 V +10 %, -15 %, 50 Hz; +3% -5%; 1 x 230 V, +10 %, -15 %, 50 Hz ±2% (or according to data on the rating plate)

Operating position

Operating position of the actuators MODACT® is arbitrary; it is only limited by inclination of the electric motor axis max 15° under the horizontal plane. In this way, reducing of service life of rubber sealing of the electric motor shaft by possible fragments or impurities from the oil filling is prevented.

When the actuator is assembled with the electric motor above the horizontal plane the oil filling should be topped up so that reliable lubrication of the motor pinion is ensured.

Tripping torque

Tripping torque is set at the manufacturer according to the customer's requirements within the range given in Table no.1, 2, 3. If setting of tripping torque is not required maximum tripping torque of the required type number of the electric actuator is set.

Self-locking

The actuator is self-locking provided that the load only acts in the direction against motion of the actuator output shaft. Self-locking is ensured by a roller arrest immobilizing the electric motor rotor even in the case of manual control.

In order to observe safety regulations, the actuators cannot be used for driving transportation lifting devices with possible transport of persons or for installations where persons can stand under the lifted load.

Manual control

The actuators are controlled by a hand wheel directly (without a clutch) and they can also be controlled when the electric motor is running. By rotating the hand wheel in the clock-wise direction the actuator output pull rod is thrown out (closed).

Anti-condensation heater

The actuators are fitted with an anti-condensation heater preventing condensation of water vapour.

Terminal board of electric actuator

The electric actuator is fitted with a terminal board for connecting the actuators to external circuits. The terminal board is fitted with terminals for connecting one conductor of cross-section 2.5 mm^2 or two conductors of identical cross-section up to 1 mm^2.

Isolation resistance

Isolation resistance of electric control circuits against the frame and against each other is min. 20 Mohm. Isolation resistance of the electric motor is min. 1.9 Mohm. After a dump test, isolation resistance of control circuits is min. 2 Mohm.

Electric strength ofelectric circuit isolation

Control circuits and circuit of anti-condensation heater		1 500 V, 50 Hz
Electric motor	Un = 1 x 230 V	1 500 V, 50 Hz
	Un = 3 x 400 V	1 800 V, 50 Hz

Electronic brake

The electronic brake is fitted to the actuators with contactors. The brake reduces dramatically the time of the actuator run-out; regulation is thus more precise. It is appropriate for electric motors with supply voltage 3 x 230 / 400 V and output up to 2,5 kW.

Protection

The electric actuators are fitted with external and internal protecting terminal for securing protection against dangerous shock voltage.

The protecting terminals are marked according to ČSN IEC 417 (34 5550).

Noise

Average level of acoustic pressure A of electric actuators according to ČSN ISO 3746 (01 1606) must not exceed the value 85 dB (A).

Level of acoustic output A must not exceed 95 dB (A).

Deviations of basic parameters

Tripping torque	±12 % of max. tripping torque
Shifting speed	- 10 % to +15 % of rated value (idle run)

Protective enclosure

Protective enclosure of actuators:	MODACT MONED, MONEDJ – IP 55 according to ČSN EN 60 529
	MODACT MOPED – IP 67 according to ČSN EN 60 529

DESCRIPTION OF ACTUATOR

The electric actuators are designed for direct mounting on the controlled element. They are connected by a flange and a clutch according to ČSN 18 6314. The actuator flanges also comply with ISO 5210. The clutches for transmitting motion to the valve are:

shape A (with adapter), according to ISO 5210 and DIN 3210;
shape B1 (with adapter), according to ISO 5210 (shape B according to DIN 3210);
shape B3 (without adapter), according to ISO 5210 (shape E according to DIN 3210);
shape D (without adapter, according to DIN 3210;
shape C (without adapter), according to DIN 3338.

The adapters are fitted between the electric actuator and the valve.

The asynchronous electric motor drives, via a drive gearing, the central wheel of the differential gear located in the load-bearing box of the electric actuator (force gear). In motor control, the crown wheel of the epicyclic differential is held in constant position by a self-locking screw gear. The hand wheel connected with the screw provides for alternative manual control even when the electric motor is running, without any danger to the operator.

The output shaft is fix-connected with the epicyclic gear catch driver and passes on to the control box where all control elements of the actuator are installed.

The control elements are accessible after removing the control box lid.

The actuators designated MONED, MONEDJ are used with electric motors with the protective enclosure IP 55; the actuators designated MOPED with electric motors with the protective enclosure IP67. The complete actuator has a protective enclosure according to the electric motor used.

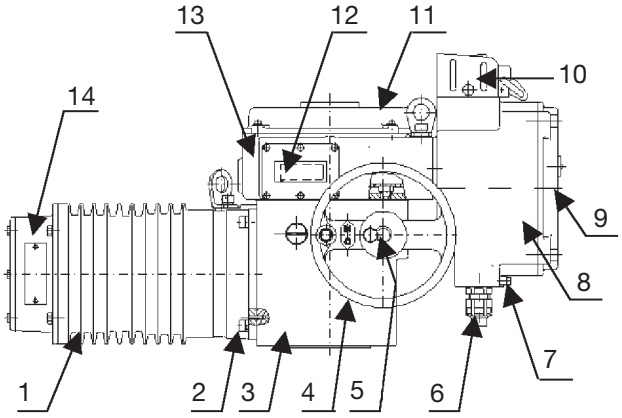

Description:
1 – three-phase asynchronous electric motor
2 – countershaft gear box
3 – power gearing
4 – wheel of manual control
5 – securing screw of hand wheel
6 – cable bushings (connector)
7 – external protective terminal
8 – terminal box
9 – terminal box lid
10 – block of local control BMO
11 – control box lid
12 – display
13 – control box

Fig. 1 – ***Actuator set-up***

ELECTRONIC OUTFIT

Electro-mechanical control board is replaced with the electronic system **DMS2** or **DMS2 ED.** Both systems scan position of the output shaft and torque of the electric actuator by contact-free magnetic sensors. The sensor of the output shaft position is absolute and does not require any backup power supply in case supply voltage is disconnected during operation of the electric actuator. Both systems can be set and monitored by a computer with controlling programme or manually without a computer.

The more simple system **DMS2 ED** substitutes electromechanical parts and/or provides for controlling the electric actuator by input analog signal as in the version Control.

The system **DMS2** enables the electric actuator to be used for two-position and three-position regulation or to be connected to the industrial bus bar Profibus.

DMS2 ED

Basic outfit:

Control unit	It also contains the sensor of position of the output shaft, 4 push-buttons and 3 signal LEDs for setting and checking the actuator.
Torque-limit unit	
Source unit	Contacts of seven relays (MO, MZ, PO, PZ, SO, SZ, Ready) are connected to the terminal board; state of each relay is signalized by LED. The unit enables the heating resistor to be connected and controlled by the thermostat.

Optional outfit:

Feedback signal	4 – 20 mA
Analog regulator	
Position Indicator - LED display	
Local control	
Contactors or block of contact-less control	for version Control
Electronic brake	

Main merits:
Absolute scanning of position independent of backup power supply.
Simple setting by 4 push-buttons, computer PC or PDA.
Possibility of back-up making of set parameters on PC.
Intended for direct substitution of electromechanical components of the electric actuator.

Parameters:

Scanning of position	Contact-less magnetic
Scanning of torque	Contact-less, magnetic
Working stroke	2 – 1700 rev.
Blocking of torque	0 – 20 s at reversing in limit positions
Input signal	0 (4) – 20 mA with switched on regulator function Local/Remote control, Local open/close
Output signal	7 x relay 250 V AC, 3 A (MO, MZ, PO, PZ, SO, SZ, READY) Position signal 4 – 20 mA max. 500 ohm, active/passive, galvanic-isolated (optional), LED display (optional) Electronic brake (optional)
Power supply	230 V AC, 50 Hz, 4 W, over-voltage category II

DMS2
Basic outfit:

Control unit	It also includes a sensor of the output shaft position, 2 signal LED.
Torque-limit unit	
Source unit	It includes: **2 relays** for electric motor control; **Relay Ready** with change-over contact connected to the terminal board; **Signalling relays** 1 – 4 with one pole of the switching contact connected to the terminal board; Second poles of the switching contacts of relays 1 – 4 are interconnected and brought out to the terminal COM. Heating resistor switched by a thermostat is connected to the unit. The unit controls power switches of the electric motor (contactors or contact-less switching). The electronic brake can be connected to the unit.
Unit of display	Two-row display, 2 x 12 alpha-numeric characters.
Unit of push-buttons	Push-buttons "Open", "Close", "Stop", selector switch "Local", "Remote", "Stop”.

Recommended outfit:
Electronic brake - the actuator can be fitted wit the electronic brake – this reduces the actuator run-down after switching-off.

Optional outfit (the electric actuator must be fitted with one of these units):

Unit of two- and	Control of the electric actuator by shifting to position "Open" and "Close" three-position control or by analog signal 0 (4) – 20 mA.

Unit of connection Profibus – control of the electric actuator by industrial bus bar Profibus.

The electronic control DMS2 checks, within its function, sequence and fall-out of phases of supply voltage.

Example of wiring diagram of electronics **DMS2 Analog** in version Control
(actuators MODACT MONED, MOPED)

E0006

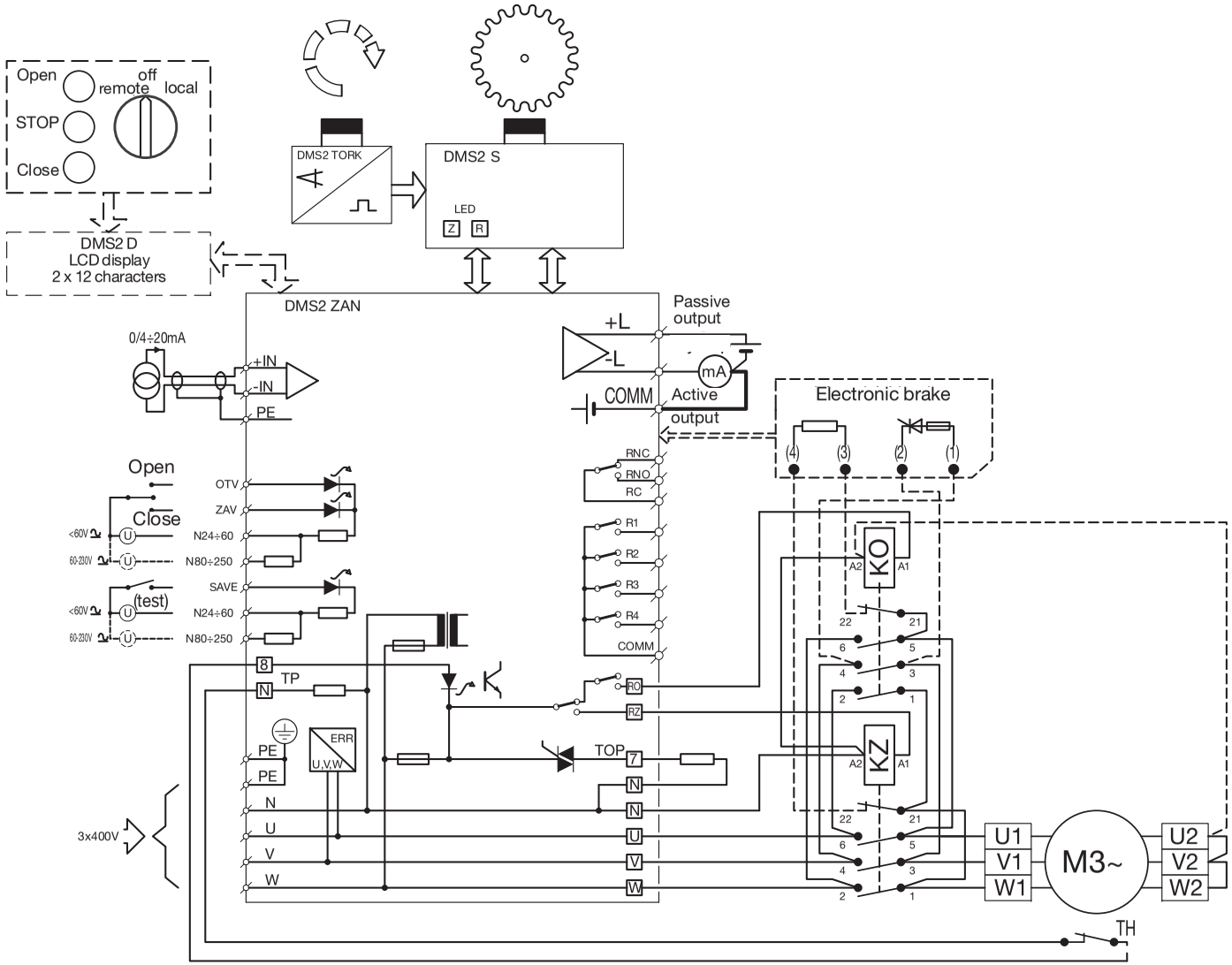

Example of wiring diagram of electronics **DMS2 Analog** in version Control
(actuators MODACT MONEDJ)

E0007

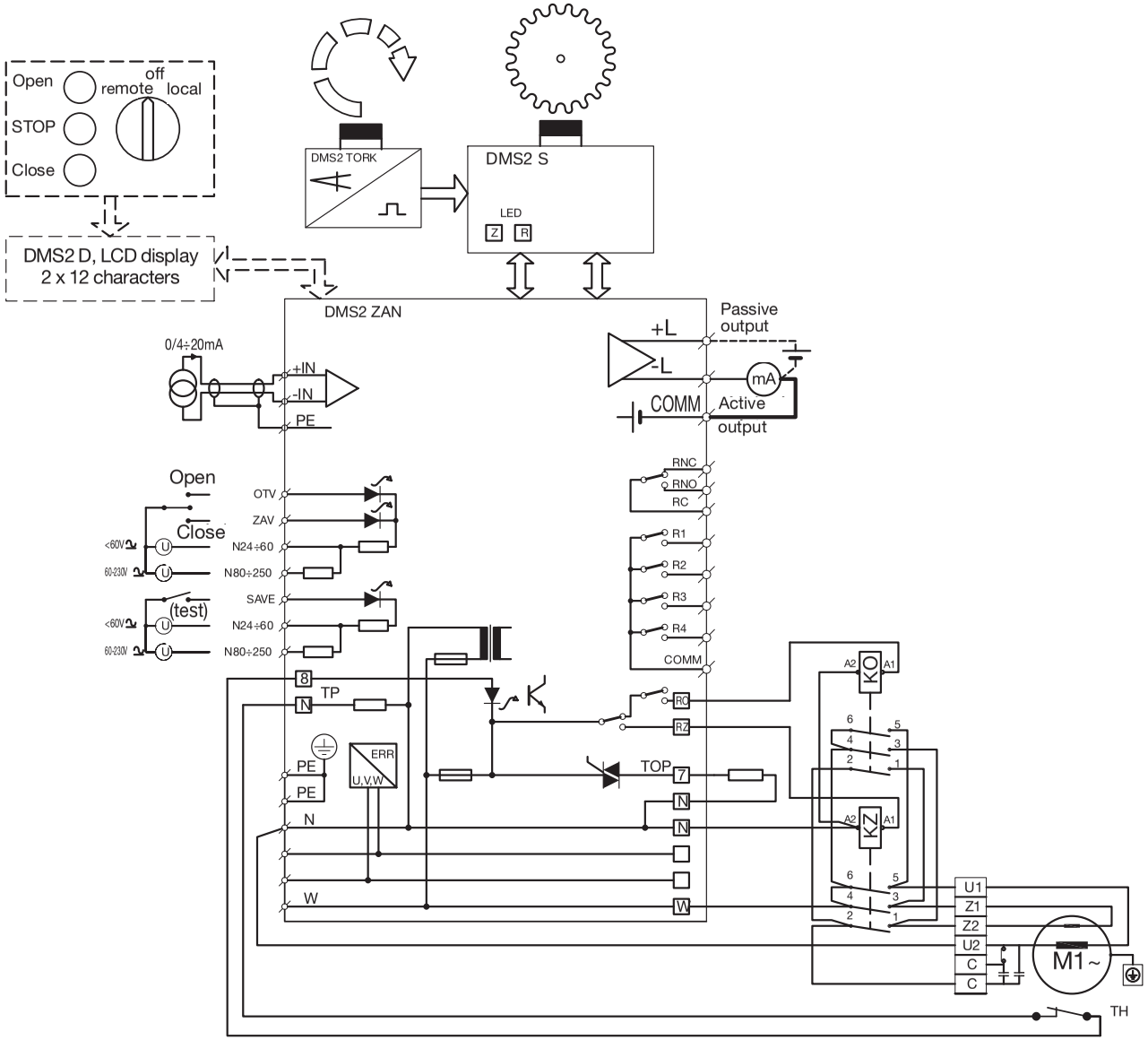

Example of wiring diagram of electronics **DMS2 Profibus** in version Control
(actuators MODACT MONED, MOPED)

E0008

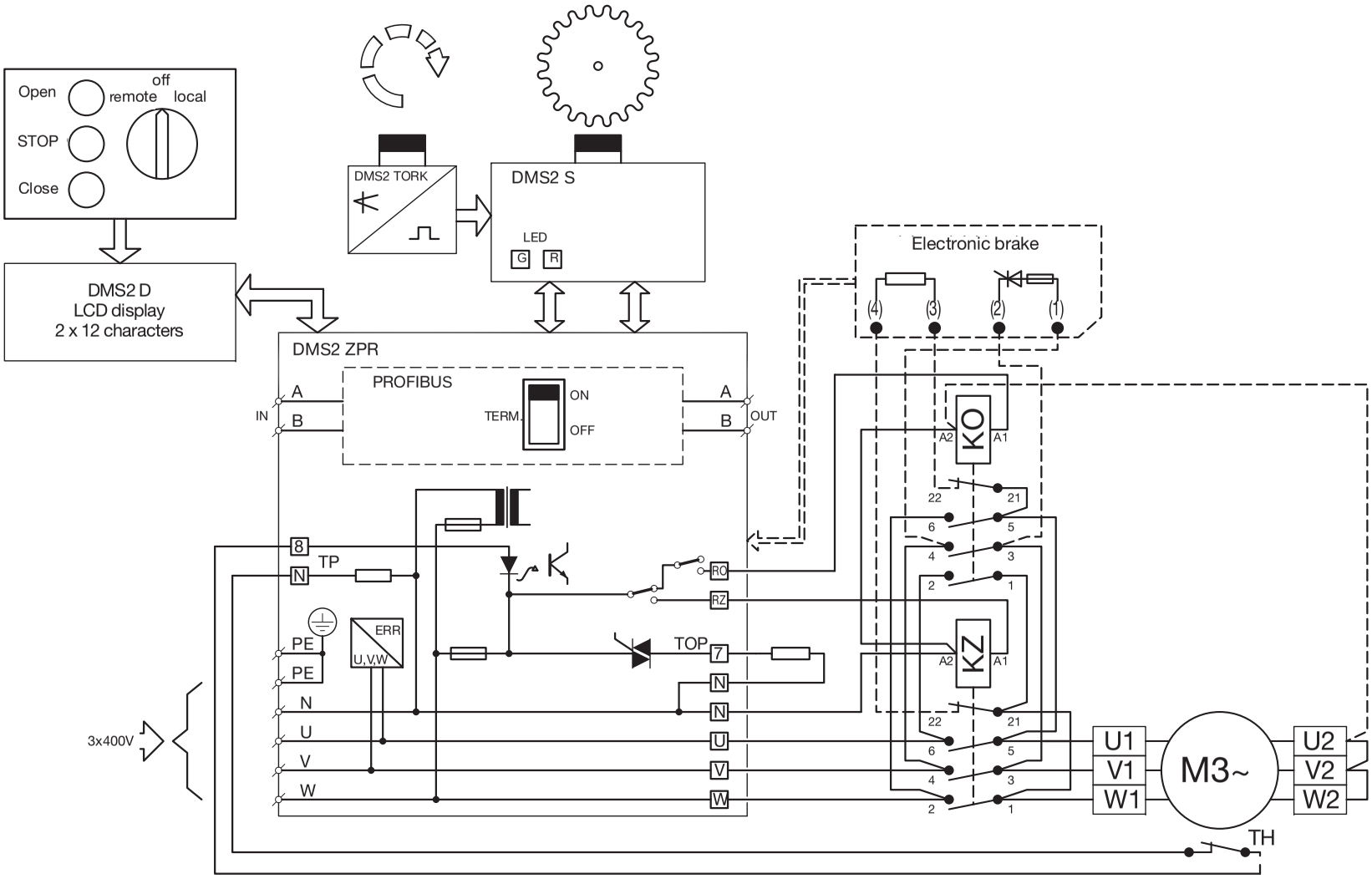

Example wiring diagram electronics **DMS2 Profibus** in version Control
(actuators MODACT MONEDJ)

E0009

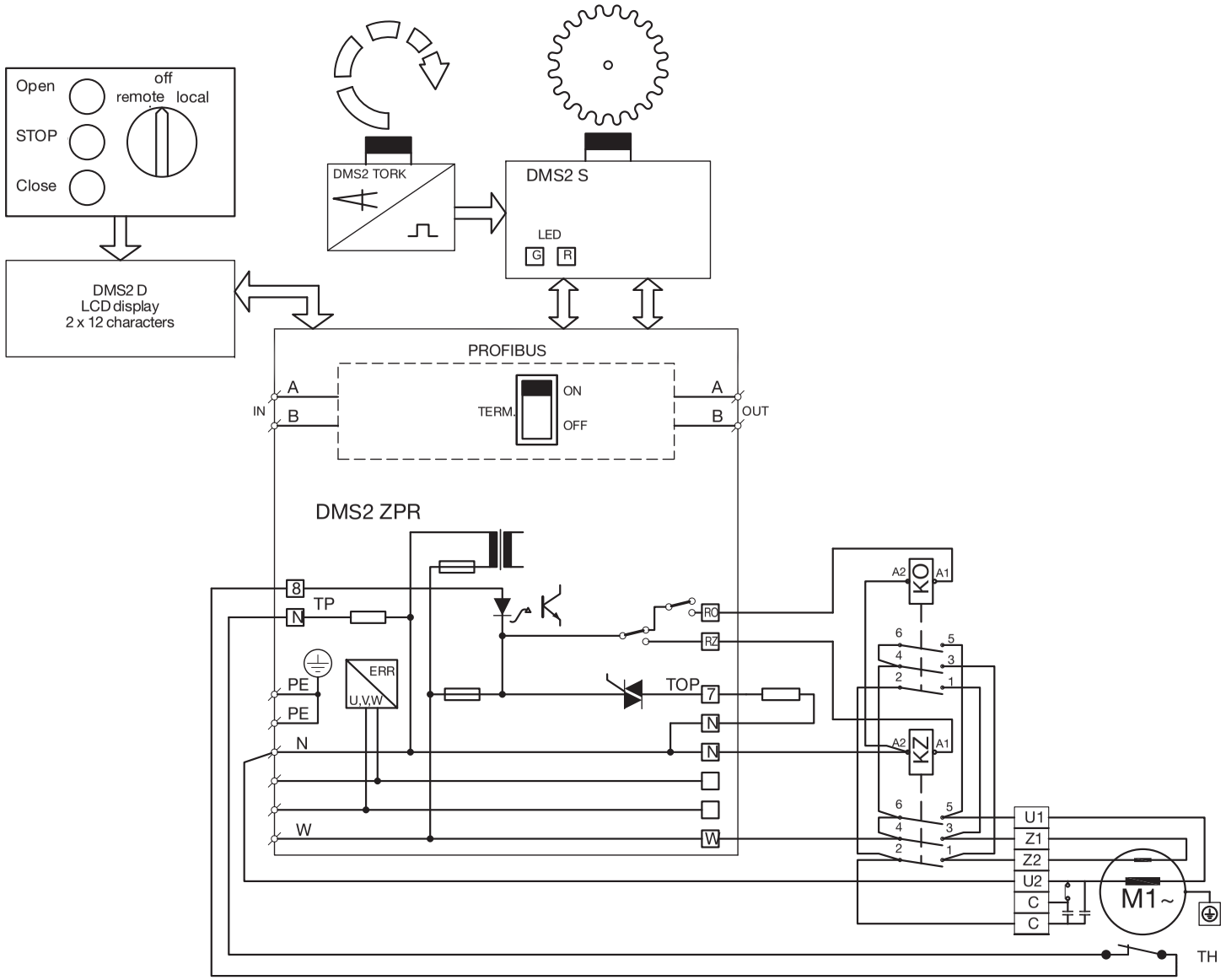

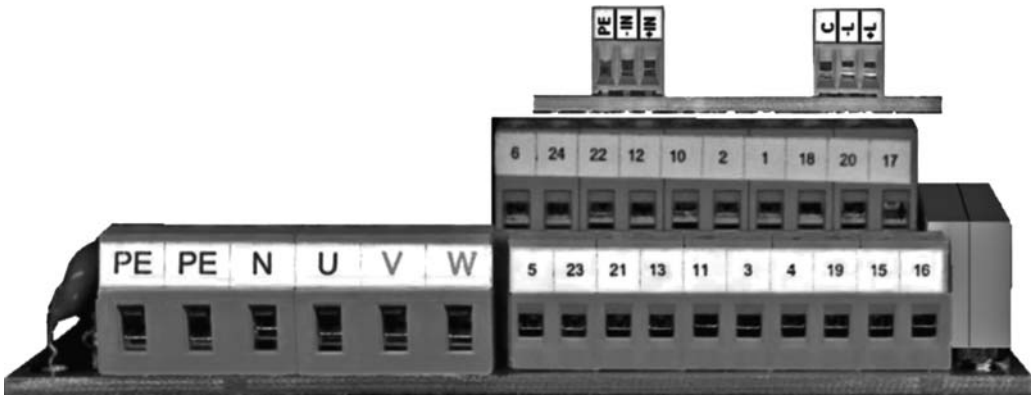

The terminal board of the actuator with electronics DMS2 ED.

Note: *If the actuator is of one-phase version the supply mains inlet is only connected to the terminals* ***PE, N U.*** *The terminals* ***V, W*** *will remain unconnected.*

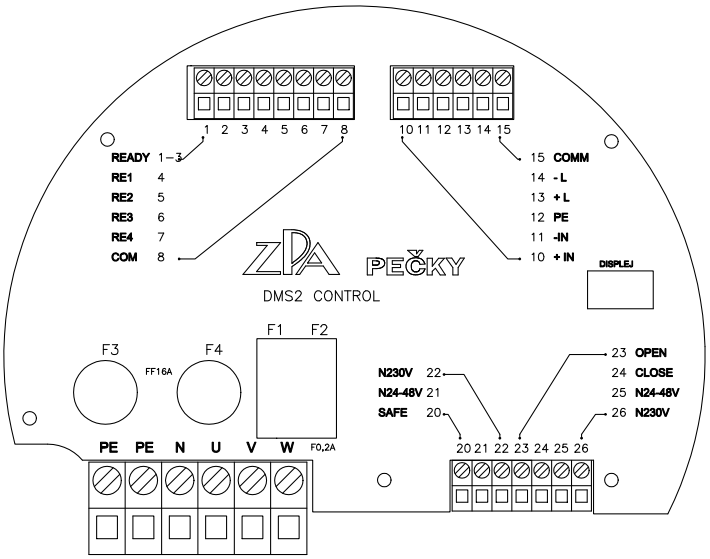

Terminal board DMS2 Analog

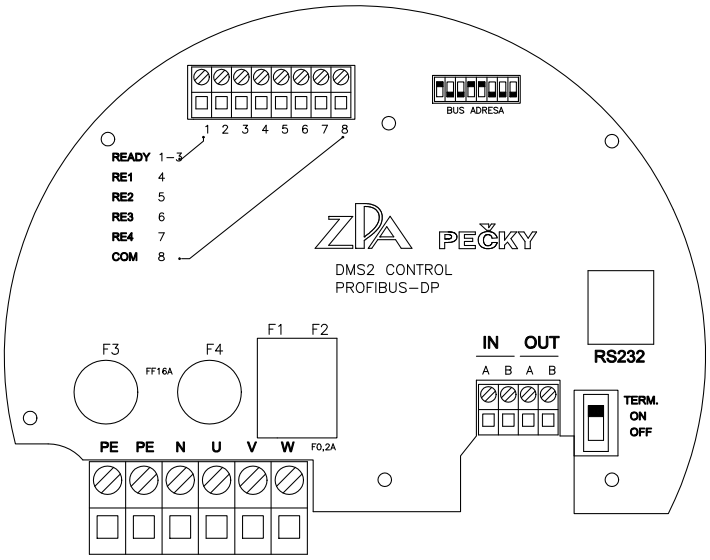

Terminal board DMS2 Profibus

Note: *The actuators MONEDJ are supplied from single-phase mains. The inlet is connected to the terminal N (middle conductor) and W (phase conductor). The terminals U, V will remain unconnected.*

Table no. 1 – Electric actuators MODACT MONED – basic technical parameters

Type designation	Control	Torque [Nm]		Speed shifting [1/min]	Working stroke (rev.)	Electric motor				Weight [kg]	Type number		Notes (type of electric motor)
		Tripping	Engage			Output [kW]	Speed [1/min]	I_n (400 V) [A]	$\frac{I_z}{I_n}$		basic 1 2 3 4 5	complem 6 7 8 9 10	
MONED 40/135-7	C	20 – 40	135	7	2–2010	0,09	630	0,36	2,2	28	5 2 0 3 0	x x J x NED	1LA7070-8AB
MONED 40/220-9	C		220	9		0,18	850	0,74	2,3	28		x x 0 x NED	1LA7070-6AA
MONED 40/135-15	C		135	15		0,18	850	0,74	2,3	28		x x 1 x NED	1LA7070-6AA
MONED 40/100-25	C		100	25		0,25	1350	0,77	3,0	27		x x 2 x NED	1LA7070-4AB
MONED 40/60-40	C		60	40		0,25	1350	0,77	3,0	27		x x 3 x NED	1LA7070-4AB
MONED 40/95-50	C		95	50		0,37	2740	1,00	3,5	27		x x 4 x NED	1LA7070-2AA
MONED 40/60-80	C		60	80		0,37	2740	1,00	3,5	27		x x 5 x NED	1LA7070-2AA
MONED 80/135-7	C	40 – 80	135	7		0,09	630	0,36	2,2	28		x x K x NED	1LA7070-8AB
MONED 80/220-9	C		220	9		0,18	850	0,74	2,3	28		x x 6 x NED	1LA7070-6AA
MONED 80/135-15	C		135	15		0,18	850	0,74	2,3	28		x x 7 x NED	1LA7070-6AA
MONED 80/100-25	C		100	25		0,25	1350	0,77	3,0	27		x x 8 x NED	1LA7070-4AB
MONED 75/95-40	C	40 – 75	95	40		0,37	1370	1,05	3,3	28		x x 9 x NED	1LA7073-4AB
MONED 70/95-50	C	40 – 70	95	50		0,37	2740	1,00	3,5	27		x x A x NED	1LA7070-2AA
MONED 70/90-80	C		90	80		0,55	2800	1,36	4,3	28		x x B x NED	1LA7073-2AA
MONED 125/200-7	C	80 – 125	200	7		0,12	645	0,51	2,2	28		x x L x NED	1LA7073-8AB
MONED 125/220-9	C		220	9		0,18	850	0,74	2,3	28		x x C x NED	1LA7070-6AA
MONED 125/200-15	C		200	15		0,25	860	0,79	2,7	28		x x D x NED	1LA7073-6AA
MONED 120/155-25	C	80 – 120	155	25		0,37	1370	1,05	3,3	27		x x E x NED	1LA7073-4AB
MONED 115/150-50	C	80 – 115	150	50		0,55	2800	1,36	4,3	28		x x H x NED	1LA7073-2AA
MONED 200/320-9	C	100 – 200	320	9		0,25	850	0,78	2,7	28		x x R x NED	1LA7073-6AA
MONED 200/260-15	C	100 – 200	260	15		0,37	1370	1,05	3,3	27		x x S x NED	1LA7073-4AB
MONED 200/310-25	C	100 – 200	310	25		0,60	1340	1,65	3,6	28		x x T x NED	1LA9073-4LA
MONED 200/260-50	C	100 – 200	260	50		0,94	2735	2,3	4,8	29		x x U x NED	1LA9073-2LA
MONED 95/125-7	C	63 – 95	125	7	2–1420	0,09	630	0,36	2,2	49	5 2 0 3 1	x x C x NED	1LA7070-8AB
MONED 100/210-9	C		210	9		0,18	850	0,74	2,3	49		x x 0 x NED	1LA7070-6AA
MONED 100/185-15	C	63 – 100	185	15		0,25	860	0,79	2,7	49		x x 1 x NED	1LA7073-6AA
MONED 100/150-25	C		150	25		0,37	920	1,20	3,1	41		x x 2 x NED	1LA7080-6AA
MONED 100/170-40	C		170	40		0,55	1395	1,45	3,9	41		x x 3 x NED	1LA7080-4AA
MONED 100/150-63	C		150	63		0,75	1395	1,86	4,0	42		x x 4 x NED	1LA7083-4AA
MONED 100/200-80	C		200	80		1,1	2845	2,40	6,1	43		x x E x NED	1LA7083-2AA
MONED 100/130-100	C		130	100		1,1	1415	2,55	4,3	50		x x 5 x NED	1LA7090-4AA
MONED 100/150-145	C		150	145		1,5	2860	3,25	5,5	51		x x F x NED	1LA7090-2AA
MONED 125/190-7	C	100 – 125	190	7		0,12	645	0,51	2,2	49		x x D x NED	1LA7073-8AB
MONED 160/210-9	C	100 – 160	210	9		0,18	850	0,74	2,3	49		x x 6 x NED	1LA7070-6AA
MONED 160/220-16	C		220	16		0,37	920	1,20	3,1	50		x x 7 x NED	1LA7080-6AA
MONED 160/250-25	C		250	25		0,55	910	1,60	3,4	42		x x 8 x NED	1LA7083-6AA
MONED 160/245-40	C		245	40		0,75	1395	1,86	4,0	42		x x 9 x NED	1LA7083-4AA
MONED 160/300-65	C		300	65		1,5	1420	3,40	5,0	54		x x A x NED	1LA7096-4AA
MONED 160/250-80	C		250	80		1,5	2860	3,25	5,5	46		x x H x NED	1LA7090-2AA

MONED 160/210-100	C		210	100		1,5	1420	3,40	5,0	54		x x B x NED	1LA7096-4AA
MONED 160/250-145	C		250	145		2,2	2880	4,55	6,3	54		x x J x NED	1LA7096-2AA
MONED 245/340-7	C	160 – 245	340	7		0,25	680	1,03	2,6	52		x x 6 x NED	1LA7083-8AB
MONED 250/350-9	C		350	9		0,37	920	1,20	3,1	50		x x 0 x NED	1LA7080-6AA
MONED 250/360-16	C	160 – 250	360	16		0,55	910	1,60	3,4	52		x x 1 x NED	1LA7083-6AA
MONED 250/360-25	C		360	25		0,75	915	2,10	3,7	45		x x 2 x NED	1LA7090-6AA
MONED 240/310-40	C	160 – 240	310	40		1,1	1415	2,55	4,3	45		x x 3 x NED	1LA7090-4AA
MONED 230/300-65	C	160 – 230	300	65	2–1420	1,5	1420	3,40	5,0	54		x x 4 x NED	1LA7096-4AA
MONED 250/425-80	C	160 – 250	425	80		2,2	2880	4,55	6,3	49		x x 5 x NED	1LA7096-2AA
MONED 195/250-145	C	160 – 195	250	145		2,2	2880	4,55	6,3	54	5 2 0 3 2	x x 7 x NED	1LA7096-2AA
MONED 490/640-7	C	230 – 400	640	7		0,55	675	1,58	3,0	55		x x E x NED	1LA7096-8AB
MONED 400/530-10	C	230 – 400	530	10		0,55	910	1,6	3,4	53		x x F x NED	1LA7083-6AA
MONED 400/515-16	C	230 – 400	515	16		0,75	915	2,1	3,7	55		x x H x NED	1LA7090-6AA
MONED 400/548-25	C	230 – 400	548	25		1,1	915	2,9	3,8	48		x x J x NED	1LA7096-6AA
MONED 400/580-40	C	230 – 400	580	40		1,8	1480	3,9	5,1	48		x x K x NED	1LA9090-4LA
MONED 380/490-75	C	230 – 380	490	75		2,5	1490	5,9	5,1	58		x x L x NED	1LA9096-4LA
MONED 380/490-140		230 – 380	490	140		3,8	2810	7,9	6,5	57		x x M x NED	1LA9096-2LA
MONED 500/720-16	C		720	16		1,1	680	2,90	3,4	97		x x 0 x NED	1LA7107-8AB
MONED 500/650-25	C		650	25		1,1	915	2,90	3,8	90		x x 1 x NED	1LA7096-6AA
MONED 500/690-40	C	250 – 500	690	40		2,2	940	5,20	4,6	93	5 2 0 3 3	x x 2 x NED	1LA7113-6AA
MONED 500/765-63			765	63		3,0	1420	6,40	6,2	90		x x 3 x NED	1LA7107-4AA
MONED 500/650-100			650	100		4,0	1440	8,20	6,5	97		x x 4 x NED	1LA7113-4AA
MONED 630/900-16	C		900	16		1,5	705	3,90	3,7	99		x x 0 x NED	1LA7113-8AB
MONED 630/835-20	C	320 – 630	835	20		1,5	925	3,90	4,2	99		x x 1 x NED	1LA7106-6AA
MONED 630/945-35	C		945	35		2,2	1420	4,70	5,5	97		x x 2 x NED	1LA7106-4AA
MONED 630/1000-63			1000	63	2–1090	4,0	1440	8,20	6,5	97	5 2 0 3 4	x x 3 x NED	1LA7113-4AA
MONED 1100/1530-16	C	500 – 1000	1530	16		2,2	700	6,20	4,2	102		x x 5 x NED	1LA7115-8AB
MONED 930/1210-22	C	500 – 930	1210	22		2,2	940	5,20	4,6	102		x x 6 x NED	1LA7113-6AA
MONED 1000/1330-35		500 – 1000	1330	35		3	1420	6,40	5,6	100		x x 7 x NED	1LA7107-4AA
MONED 1100/1530-63		500 – 1000	1530	63		5,5	1440	12,10	6,8	109		x x 9 x NED	1LA9113-4LA
MONED 1250/1640-45		630 – 1250	1640	45		5,5	950	12,80	5,0	211		x x 0 x NED	1LA7134-6AA
MONED 1250/1720-70			1720	70		7,5	1455	15,20	6,7	206		x x 1 x NED	1LA7133-4AA
MONED 930/1200-100		630 – 930	1200	100		7,5	1455	15,20	6,7	206	5 2 0 3 5	x x 2 x NED	1LA7133-4AA
MONED 2000/2600-70		1000 – 2000	2600	70		11	1450	22,5	7,4	217		x x 3 x NED	1LA9133-4LA
MONED 1400/1850-100		800 – 1400	1850	100		11	1450	22,5	7,4	217		x x 4 x NED	1LA9133-4LA
MONED 2500/3550-20		1000 – 2500	3550	20		5,5	950	12,80	5,0	309		x x 0 x NED	1LA7134-6AA
MONED 2500/3700-30			3700	30		7,5	1455	15,20	6,7	304		x x 1 x NED	1LA7133-4AA
MONED 2000/2600-40		1000 – 2000	2600	40	1–470	7,5	1455	15,20	6,7	304	5 2 0 3 6	x x 2 x NED	1LA7133-4AA
MONED 4000/5600-30		2000 – 4000	5600	30		11	1450	22,5	7,4	315		x x 3 x NED	1LA9133-4LA
MONED 2800/4000-40		1600 – 2800	4000	40		11	1450	22,5	7,4	315		x x 4 x NED	1LA9133-4LA

Notes:

1) Rated torque for operation S2 is equal to 60 % of the maximum tripping torque. Rated torqu:e for operation S4 is equal to 40 % of the maximum tripping torque.

2) Data on weight apply to the version with connecting dimensions C, D, E.

3) Actuators type no. 52 030 are at disposal with connecting dimensions of the actuators type no. 52 031, but with ∅d6 28, shape C.

4) Basic working stroke - type n. 52 030 – 52 035: 2 – 1350 rev.; type n. 52 036: 1 – 680 rev.

5) In the version Control, the actuators can be delivered with electric motors of output above 2,5 kW, however, without electronic brake.

Table no. 2 – Electric actuators MODACT MOPED – basic technical parameters

Type designation	Control	Torque [Nm]		Speed shifting [1/min]	Working stroke (rev.)	Electric motor					Weight [kg]	Type number	
		Tripping	Engage			Type	Output [kW]	Speed [1/min]	I_n (400 V) [A]	$\frac{I_z}{I_n}$		basic	complem
												1 2 3 4 5	6 7 8 9 10
MOPED 40/70 - 7	C	20 – 40	70	7	2–2010	EAMR 71L08	0,05	650	0,42	1,6	28	5 2 0 3 0	x x J x PED
MOPED 40/65 - 9	C		65	9		EAMS 71L06L	0,06	830	0,34	2,0	28		x x 0 x PED
MOPED 40/55 - 15	C		55	15		EAMS 71L06	0,09	870	0,47	2,0	28		x x 1 x PED
MOPED 40/75 - 25	C		75	25		EAMS 71L04	0,18	1350	0,56	3,0	27		x x 2 x PED
MOPED 40/60 - 40	C		60	40		EAMS 71N04L	0,25	1350	0,76	3,0	27		x x 3 x PED
MOPED 40/50 - 50	C		50	50		EAMS 71L02	0,25	2830	0,68	4,0	27		x x 4 x PED
MOPED 40/60 - 80	C		60	80		EAMS 71N02L	0,37	2740	1,0	3,5	28		x x 5 x PED
MOPED 80/135 - 7	C	40 – 80	135	7		EAMS 71N08L	0,09	630	0,36	2,2	28		x x K x PED
MOPED 80/135 - 15	C		135	15		EAMS 71N06L	0,18	835	0,62	2,3	28		x x 7 x PED
MOPED 80/100 - 25	C		100	25		EAMS 71N04L	0,25	1350	0,76	3,0	27		x x 8 x PED
MOPED 75/95-40	C	40 – 75	95	40		EAMS 71N04	0,37	1370	1,03	3,3	28		x x 9 x PED
MOPED 70/95 - 50	C	40 – 70	95	50		EAMS 71N02L	0,37	2740	1,00	3,5	27		x x A x PED
MOPED 70/90 - 80	C		90	80		EAMS 71N02	0,55	2800	1,36	4,3	28		x x B x PED
MOPED 125/200 - 7	C	80 – 125	200	7		EAMS 71N08	0,12	645	0,51	2,2	28		x x L x PED
MOPED 125/220 - 9	C		220	9		EAMS 71N06L	0,18	835	0,62	2,3	28		x x C x PED
MOPED 125/200 – 15	C		200	15		EAMS 71N06	0,25	850	0,78	2,7	28		x x D x PED
MOPED 115/155-25	C	80 – 120	155	25		EAMS 71N04	0,37	1370	1,03	3,3	27		x x E x PED
MOPED 115/150 - 50	C	80 – 115	150	50		EAMS 71N02	0,55	2800	1,36	4,3	28		x x H x PED
MOPED 95/125 - 7	C	63 – 95	125	7	2–1420	EAMS 71N08L	0,09	630	0,36	2,2	49	5 2 0 3 1	x x C x PED
MOPED 100/185 - 15	C	63 – 100	185	15		EAMS 71N06	0,25	850	0,78	2,7	49		x x 1 x PED
MOPED 100/150 - 25	C		150	25		EAMS 80N06L	0,37	920	1,2	3,1	41		x x 2 x PED
MOPED 100/170-40	C		170	40		EAMS 80N04L	0,55	1395	1,45	3,9	41		x x 3 x PED
MOPED 100/150 - 63	C		150	63		EAMS 80N04	0,75	1395	1,86	4,2	42		x x 4 x PED
MOPED 100/200 - 80	C		200	80		EAMS 80N02	1,1	2845	2,4	6,1	43		x x E x PED
MOPED 100/130 - 100	C		130	100		EAMS 90N04L	1,1	1415	2,55	4,6	50		x x 5 x PED
MOPED 100/150 - 145	C		150	145		EAMS 90N02L	1,5	2860	3,25	5,5	51		x x F x PED
MOPED 125/190 - 7	C	100 – 125	190	7		EAMS 71N08	0,12	645	0,51	2,2	49		x x D x PED
MOPED 160/210 - 9	C	100 – 160	210	9		EAMS 71N06L	0,18	835	0,62	2,3	49		x x 6 x PED
MOPED 160/220 - 16	C		220	16		EAMS 80N06L	0,37	920	1,2	3,1	50		x x 7 x PED
MOPED 160/250 - 25	C		250	25		EAMS 80N06	0,55	910	1,6	3,4	42		x x 8 x PED
MOPED 160/245 - 40	C		245	40		EAMS 80N04	0,75	1395	1,86	4,2	42		x x 9 x PED
MOPED 160/300 - 65	C		300	65		EAMS 90N04	1,5	1420	3,40	5,3	54		x x A x PED
MOPED 160/250 - 80	C		250	80		EAMS 90N02L	1,5	2860	3,25	5,5	46		x x H x PED
MOPED 160/210 - 100	C		210	100		EAMS 90N04	1,5	1420	3,40	5,3	54		x x B x PED
MOPED 160/250 - 145	C		250	145		EAMS 90N02	2,2	2880	4,55	6,3	54		x x J x PED

MOPED 245/340 - 7	C	160 – 245	340	7		EAMS 80N08	0,25	680	1,03	2,6	52		x x 6 x PED
MOPED 250/350 - 9	C		350	9		EAMS 80N06L	0,37	920	1,2	3,1	50		x x 0 x PED
MOPED 250/360 - 15	C	160 – 250	360	15		EAMS 80N06	0,55	910	1,6	3,4	52		x x 1 x PED
MOPED 250/360 - 25	C		360	25		EAMS 90N06L	0,75	915	2,1	3,7	45		x x 2 x PED
MOPED 240/310-40	C	160 – 240	310	40	2–1420	EAMS 90N04L	1,1	1415	2,55	4,6	45	5 2 0 3 2	x x 3 x PED
MOPED 230/300 - 65	C	160 – 230	300	65		EAMS 90N04	1,5	1420	3,40	5,3	54		x x 4 x PED
MOPED 250/425 - 80	C	160 – 250	425	80		EAMS 90N02	2,2	2880	4,55	6,3	49		x x 5 x PED
MOPED 195/250 - 145	C	160 – 195	250	145		EAMS 90N02	2,2	2880	4,55	6,3	54		x x 7 x PED
MOPED 500/720 - 16	C		720	16		EAMS 100N08	1,1	680	2,9	3,4	97		x x 0 x PED
MOPED 500/650 - 25	C		650	25		EAMS 90N06	1,1	915	2,9	3,8	90		x x 1 x PED
MOPED 500/690 - 40	C	250 – 500	690	40		EAMS 112N06	2,2	940	5,2	4,6	93	5 2 0 3 3	x x 2 x PED
MOPED 500/765 - 63			765	63		EAMS 100N04	3,0	1420	6,4	5,6	90		x x 3 x PED
MOPED 500/650 - 100			650	100		AMS 112N04	4,0	1440	8,2	6,0	97		x x 4 x PED
MOPED 630/900 - 16	C		900	16	2–1090	EAMS 112N08	1,5	705	3,9	3,7	99		x x 0 x PED
MOPED 630/835 - 20	C		835	20		EAMS 100N06	1,5	925	3,9	4,2	99		x x 1 x PED
MOPED 630/945 - 35	C	320 – 630	945	35		EAMS 100N04L	2,2	1420	4,7	5,6	97	5 2 0 3 4	x x 2 x PED
MOPED 630/1000 - 63			1000	63		EAMS 112N04	4,0	1440	8,2	6,0	97		x x 3 x PED
MOPED 1250/1640 - 45		630 – 1250	1640	45		EAMS 132N06H	5,5	950	12,8	5,0	211		x x 0 x PED
MOPED 1250/1720 - 70		630 – 930	1720	70		EAMS 132N04	7,5	1455	15,2	6,7	206	5 2 0 3 5	x x 1 x PED
MOPED 930/1200 - 100			1200	100		EAMS 132N04	7,5	1455	15,2	6,7	206		x x 2 x PED
MOPED 2500/3550 - 20		1000 – 2500	3550	20		EAMS 132N06H	5,5	950	12,8	5,0	309		x x 0 x PED
MOPED 2500/3700 - 30			3700	30	1–470	EAMS 132N04	7,5	1455	15,2	6,7	304	5 2 0 3 6	x x 1 x PED
MOPED 2000/2600 - 40		1000 – 2000	2600	40		EAMS 132N04	7,5	1455	15,2	6,7	304		x x 2 x PED

Notes:

1) Rated torque for operation S2 is equal to 60 % of the maximum tripping torque. Rated torqu:e for operation S4 is equal to 40 % of the maximum tripping torque.

2) Data on weight apply to the version with connecting dimensions C, D, E.

3) Actuators type no. 52 030 are at disposal with connecting dimensions of the actuators type no. 52 031, but with ∅d6 28, shape C.

4) Basic working stroke - type n. 52 030 – 52 035: 2 – 1350 rev.; type n. 52 036: 1 – 680 rev.

5) In the version Control, the actuators can be delivered with electric motors of output above 2,5 kW, however, without electronic brake.

Table no. 3 – Electric actuators MODACT MONEDJ – basic parameters
– supply voltage 1 x 230 V, 50 Hz

Type designation	Control	Torque [Nm]		Shifting speed [1/min]	Working stroke [ot]	Electric motor					Weight [kg]	Type number	
		Tripping	Engage			Type with run-in and run capacitor	Output [kW]	Speed [1/min]	I_n (230 V) [A]	$\frac{I_Z}{I_n}$ [÷]		basic	complem
												1 2 3 4 5	6 7 8 9 10
MONEDJ 40/75-25	C	20–40	75	25	2-2010	1LF7070-4	0,25	1400	1,86	3,4	27	5 2 0 3 0	x x 2 x NEDJ
MONEDJ 40/50-40	C		50	40		1LF7070-4	0,25	1400	1,86	3,4	27		x x 3 x NEDJ
MONEDJ 40/60-50	C		60	50		1LF7070-2	0,37	2895	2,85	3,5	27		x x 4 x NEDJ
MONEDJ 40/60-80	C		60	80		1LF7073-2	0,55	2860	4,15	3,7	27		x x 5 x NEDJ
MONEDJ 80/135-25	C	40–80	135	25		1LF7073-4	0,37	1400	2,6	3,2	27		x x 8 x NEDJ
MONEDJ 70/90-40	C	40–70	90	40		1LF7073-4	0,37	1400	2,6	3,2	28		x x 9 x NEDJ
MONEDJ 75/100-50	C	40–75	100	50		1LF7073-2	0,55	2860	4,15	3,7	28		x x A x NEDJ
MONEDJ 110/143-25	C	80–110	143	25		1LF7073-4	0,37	1400	2,6	3,2	28		x x E x NEDJ
MONEDJ 100/130-40	C	63–100	130	40	2-1420	1LF7080-4	0,55	1415	3,5	3,6	41	5 2 0 3 1	x x 3 x NEDJ
MONEDJ 95/124-63	C	63–95	124	63		1LF7083-4	0,75	1405	4,8	3,9	42		x x 4 x NEDJ
MONEDJ 100/230-80	C	63–100	130	80		1LF7083-2	1,1	2860	6,7	4,4	43		x x E x NEDJ
MONEDJ 100/130-100			130	100		1LF7096-4	1,5	1430	8,7	4,3	50		x x 5 x NEDJ
MONEDJ 95/124-145		63–95	124	145		1LF7090-2	1,5	2845	9,25	4,5	51		x x F x NEDJ
MONEDJ 150/195-40	C	100–150	195	40		1LF7083-4	0,75	1405	4,8	3,9	41		x x 9 x NEDJ
MONEDJ 160/208-65		100–160	208	65		1LF7096-4	1,5	1430	8,7	4,3	42		x x A x NEDJ
MONEDJ 160/208-80				80		1LF7090-2	1,5	2845	9,25	4,5	43		x x H x NEDJ
MONEDJ 130/170-145		100–130	170	145		1LF7096-2	2,2	2830	13,3	4,8	51		x x J x NEDJ
MONEDJ 250/325-40		160–250	325	40		1LF7096-4	1,5	1430	8,7	4,3	45	5 2 0 3 2	x x 3 x NEDJ
MONEDJ 220/286-80		160–220	286	80		1LF7096-2	2,2	2830	13,3	4,8	49		x x 5 x NEDJ

Electric actuators MODACT MONED, MONEDJ, MOPED

- Specification of meaning of the 6th to 10th place of the type number:

Place in the type number:	1.	2.	3.	4.	5.		6.	7.	8.	9.	10.
Type number.....	**5**	**2**	**0**	**3**	**x**	**.**	**x**	**x**	**x**	**x**	**x E D (J)**

6th place of type number:

Connecting dimensions	Version	
	Bushings	Connector
Shape A	5	F
Shape B1	6	G
Shape C	7	H
Shape D	8	J
Shape E	9	K

7th place of type number:

If one of numerals 1, 3, 5 or 7 is on the 9th place of the type number the character from Table 4 is on the 7th place.
If one of numerals 2, 4, 6 or 8 is on the 9th place of the type number the character from Table 5 is on the 7th place..

Table 4 – actuator fitted with electronics DMS2 ED

Outfit		**0**	**1**	**2**	**3**	**4**	**5**	**6**	**7**	**8**	**9**	**A**	**B**	**C**	**D**	**E**	**F**	**H**	**J**	**K**	**L**	**M**	**N**	**P**	**R**
Local control			x		x		x		x		x		x		x		x		x		x		x		x
Display				x	x			x	x			x	x			x	x			x	x			x	x
Contactors or contact-less control					x	x	x	x					x	x	x	x					x	x	x	x	
Analog module	transmitter									x	x	x	x	x	x	x	x	x	x	x	x	x	x	x	x
	regulator																	x	x	x	x	x	x	x	x

Table 5 – actuator fitted with electronics DMS2

Two-position or three-position control *)	**R**
Profibus	**P**
Two- or three-position control, without display and local control *)	**T**

**) The two or three-position control of the servomotor will be installed at the manufactureręs plant. Unless otherwise specified in the purchasing order, the three-position control will be installed (4-20 mA signal control).*

8th place of type number:

Tripping torque, shifting speed: MODACT MONED - Table 1
MODACT MOPED - Table 2
MODACT MONEDJ - Table 3

9th place of type number:

Table 6 – type of electronics, power switches, brake

Electronics DMS2 ED - without contactors	**1**
Electronics DMS2 - with contactors	**2**
Electronics DMS2 ED - with contact-less switches	**3**
Electronics DMS2 - with contact-less switches	**4**
Electronics DMS2 ED - with contactors and brake **)	**5**
Electronics DMS2 - with contactors and brake	**6**
Electronics DMS2 ED - with contact-less switches and brake **)	**7**
Electronics DMS2 - with contact-less switches and brake	**8**

Note: *Version 52 03x.xxxxNEDJ is delivered in version 52 03x.xxx1NEDJ or 52 03x.xxx2NEDJ.*
***) If the actuator has DMS2ED electronic system in configuration Electromechanics board replacement, the electronic brake will not be delivered.*

10th place of type number:

Protective enclosure: - IP 55 – NED, NEDJ
- IP 67 – PED

Dimensional sketch of electric actuators **MODACT MONED**
type no. 52 030.xxxxNED - 52 035.xxxxNED (version with terminal board)

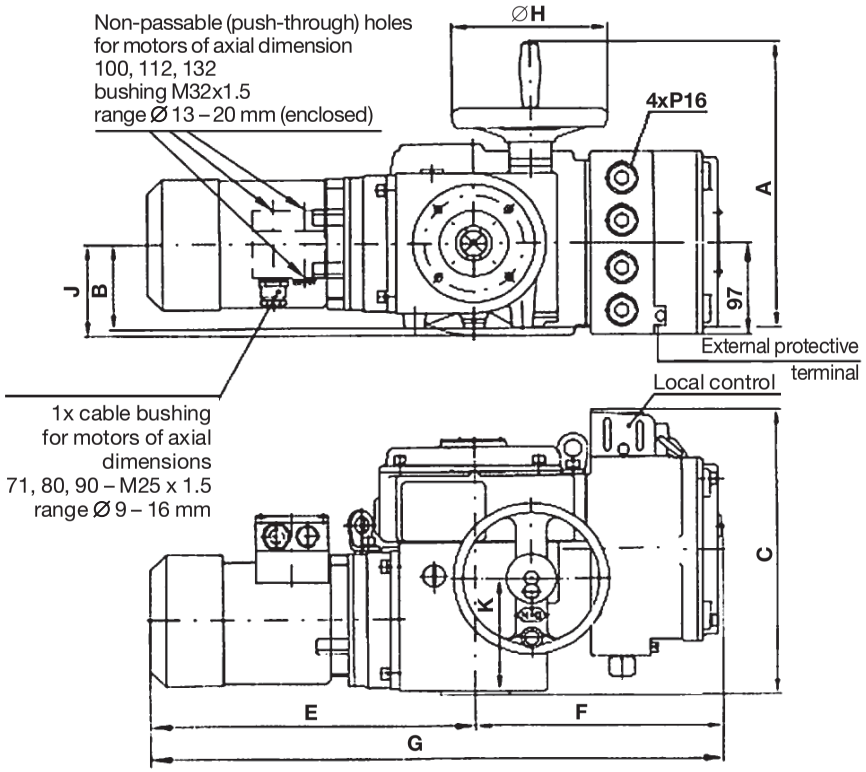

Type designation	A	B	C	D	E	F	G	ØH	J	K
52 030.xxxxNED	305	90	300	76	334	258	592	160	99	120
52 031.xxxxNED 52 032.xxxxNED	376	120	328	92	436	258	694	200	-	144
52 033.xxxxNED 52 034.xxxxNED	455	145	387	123	519	288	807	250	-	190
52 035.xxxxNED	540	178	445	153	598	298	328	926	-	234

Dimensional sketch of electric actuators **MODACT MONED**
type no. 52 036.xxxxNED (version with terminal board)

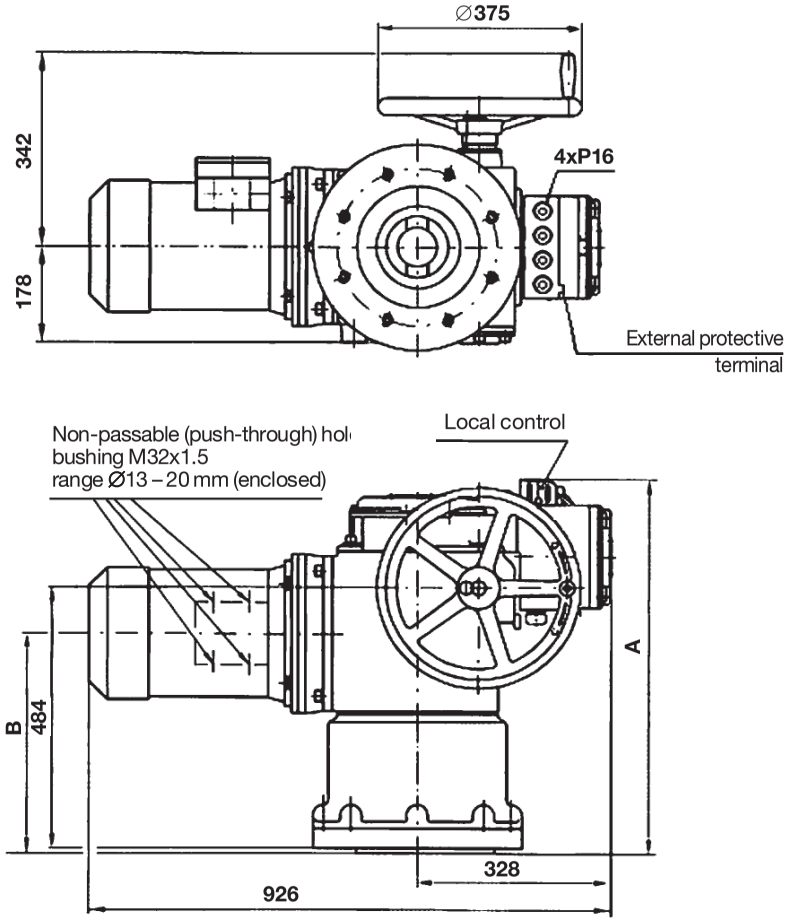

Type designation	A	B
52 036.xxxxNED shape A	785	463
52 036.xxxxNED shape B_1, C, D, E	740	418

Dimensional sketch of electric actuators **MODACT MONED**
type no. 52 030.xxxxNED - 52 035.xxxxNED (version with connector)

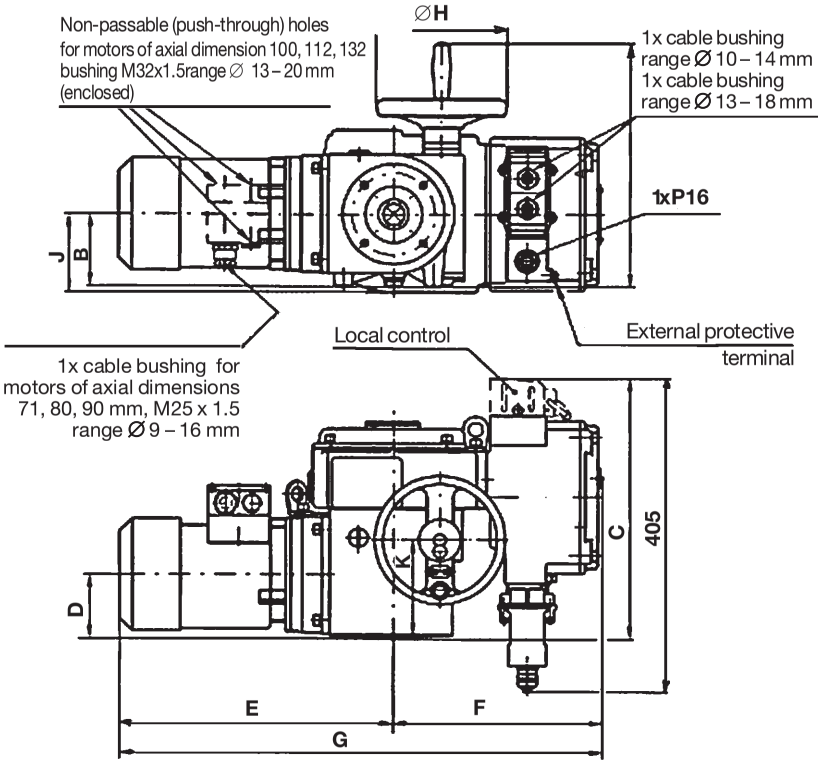

Type designation	A	B	C	D	E	F	G	∅H	J	K
52 030.xxxxNED	305	90	325	78	334	258	592	160	99	120
52 031.xxxxNED 52 032.xxxxNED	376	120	350	92	436	258	694	200	-	144
52 033.xxxxNED 52 034.xxxxNED	455	145	410	123	519	288	807	250	-	190
52 035.xxxxNED	540	178	470	153	598	328	926	375	-	234

Dimensional sketch of electric actuators **MODACT MONED**
type no. 52 036.xxxxNED (version with connector)

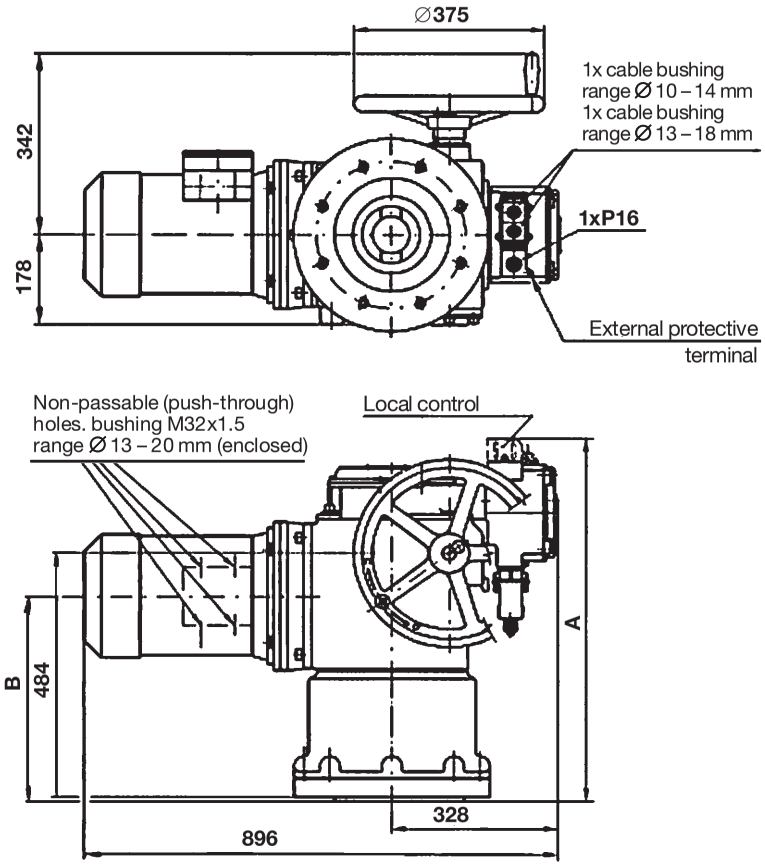

Type designation	A	B
52 036.xxxxNED shape A	785	463
52 036.xxxxNED shape B_1, C, D, E	740	418

Dimensional sketch of electric actuators **MODACT MOPED**
type no. 52 030.xxxxPED - 52 035.xxxxPED (version with terminal board)

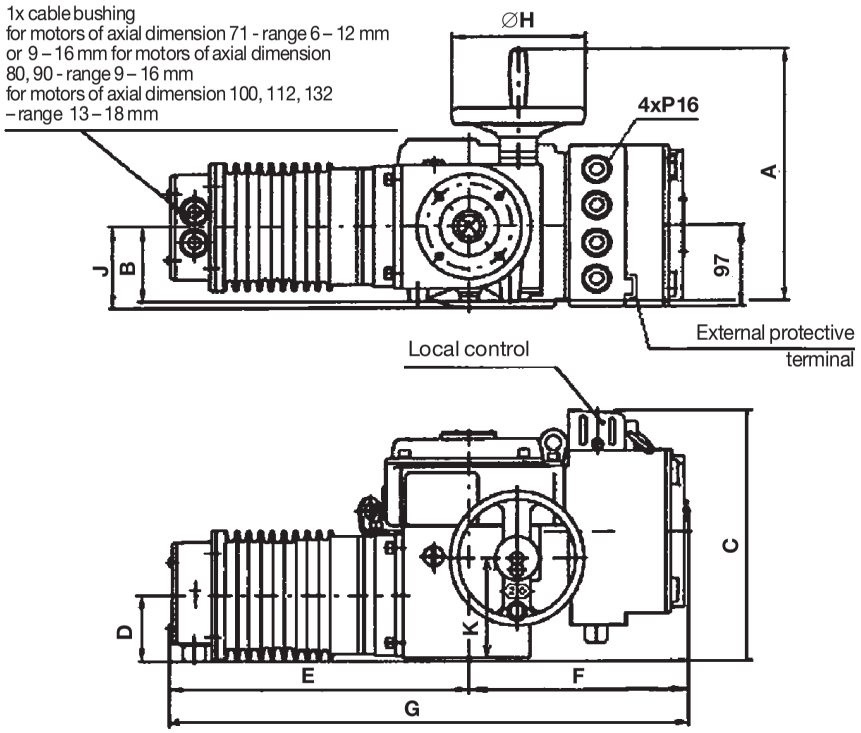

Type designation	A	B	C	D	E	F	G	∅H	J	K
52 030.xxxxPED	305	90	300	78	334	258	592	160	99	120
52 031.xxxxPED 52 032.xxxxPED	376	120	328	92	436	258	694	200	-	144
52 033.xxxxPED 52 034.xxxxPED	455	145	387	123	519	288	807	250	-	190
52 035.xxxxPED	540	178	445	153	598	328	926	375	-	234

Dimensional sketch of electric actuators **MODACT MOPED**
type no. 52 036.xxxxPED (version with terminal board)

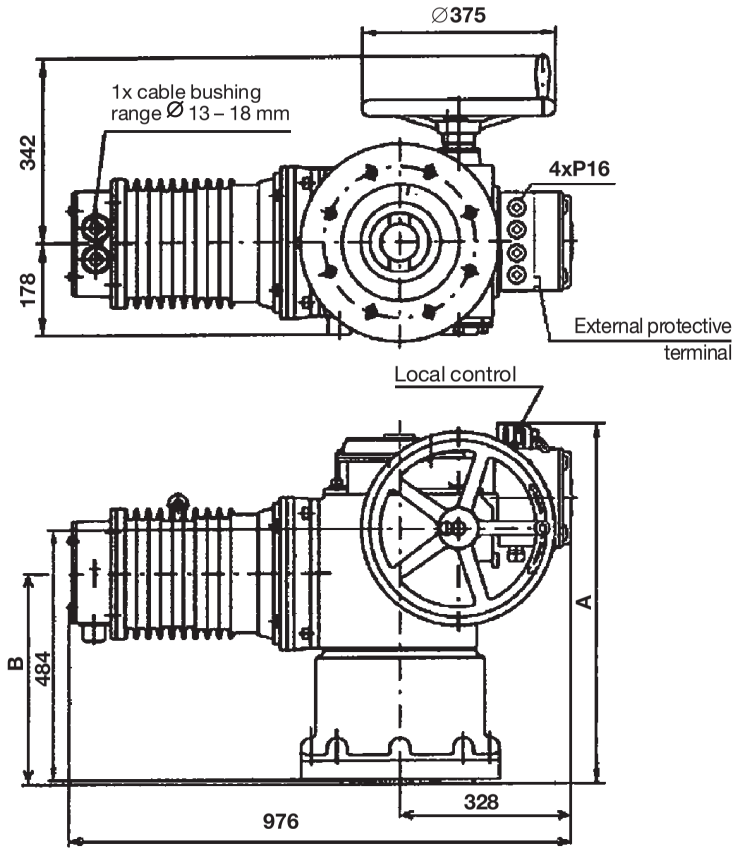

Type designation	A	B
52 036.xxxxPED shapeA	785	463
52 036.xxxxPED shape B_1, C, D, E	740	418

Dimensional sketch of electric actuators **MODACT MOPED**
type no. 52 030.xxxxPED - 52 035.xxxxPED (version with connector)

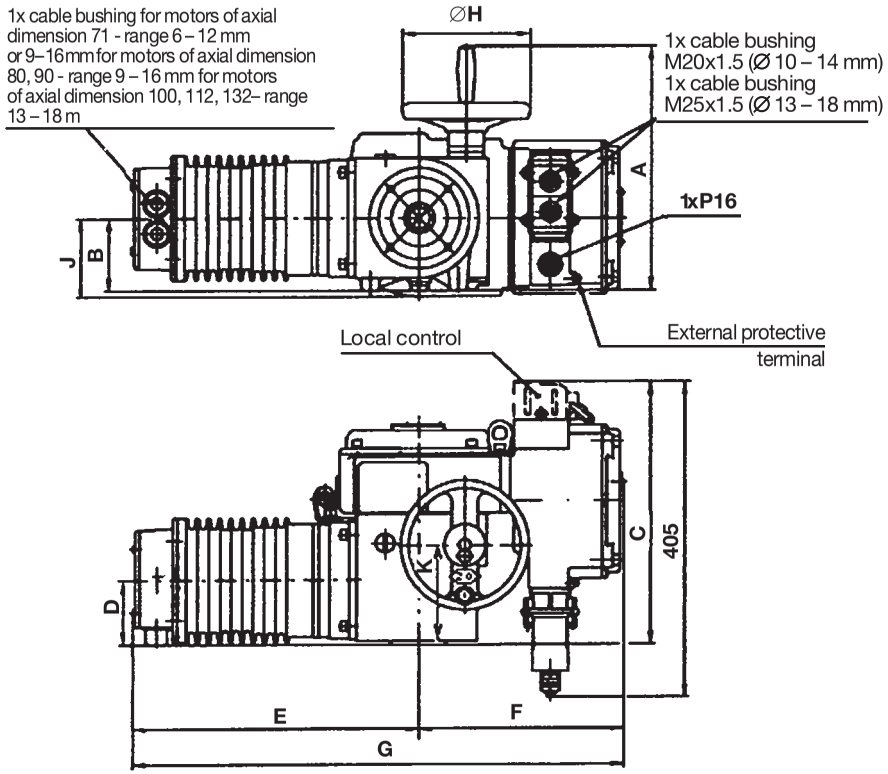

Type designation	A	B	C	D	E	F	G	∅H	J	K
52 030.xxxxPED	305	90	325	78	334	258	592	160	99	120
52 031.xxxxPED 52 032.xxxxPED	376	120	350	92	436	258	694	200	-	144
52 033.xxxxPED 52 034.xxxxPED	455	145	410	123	519	288	807	250	-	190
52 035.xxxxPED	540	178	470	153	598	328	926	375	-	234

Dimensional sketch of electric actuators **MODACT MOPED**
type no. 52 036.xxxxNED (version with connector)

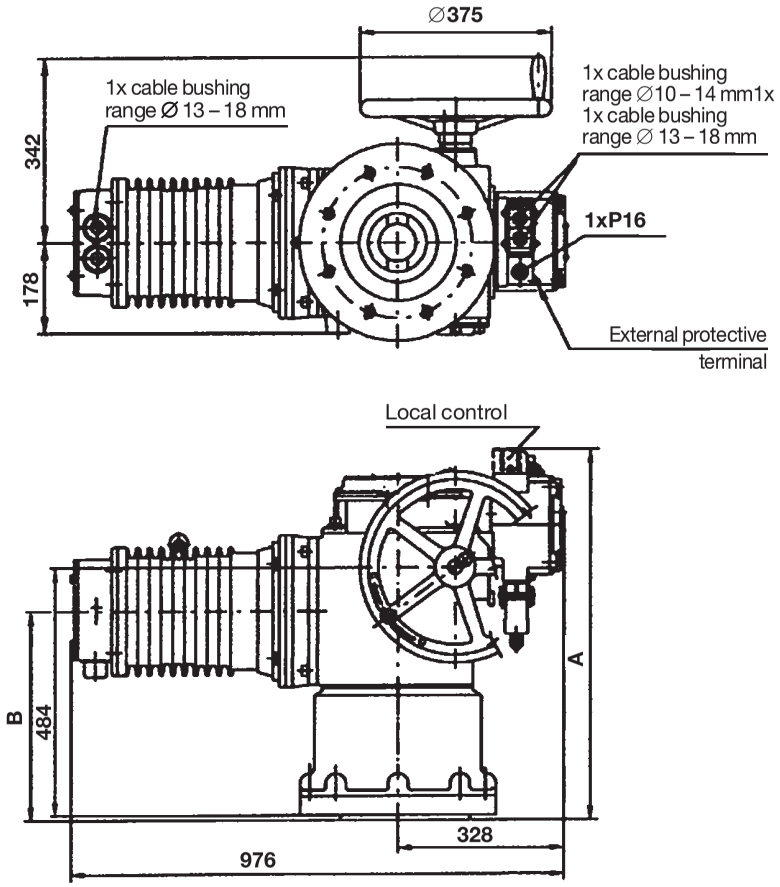

Type designation	A	B
52 036.xxxxPED tshapeA	785	463
52 036.xxxxPED shape B_1, C, D, E	740	418